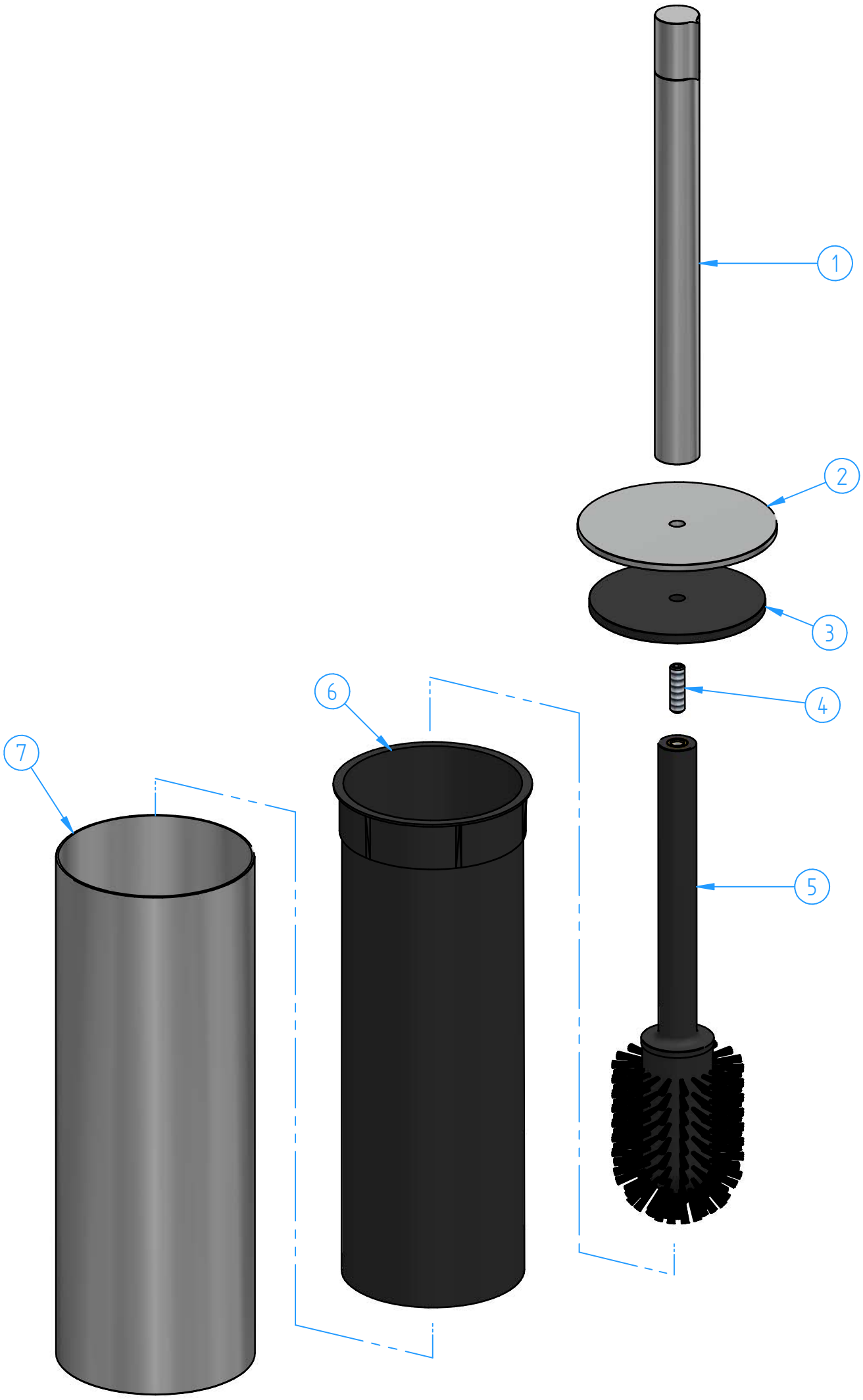

ID Number	Code	Description	Pcs
7	GTA12-001	Free-standing toilet brush cover set	1
6	CBA11-06	Plastic container for brush	1
5	CBA11-04	Brush	1
4	GTA11-08	Dowel M6x20	1
3	GTA11-06	Plastic ring for handle	1
2	GTA11-03	Handle cover	1
1	GTA11-002	Handle set	1

N°	REVIEW	Date

Sheet **1 of 3**

Scale 1:2

Material

Weight 0 kg

Description

Free-standing toilet brush holder

Code	Date of issue	Chamfers not quoted	Finishing
GTA12-00	19/02/2026	0.5x45°	SM Grinding · LU Polishing · CR GN

hotbath
italian bathroomware

This drawing is property reserved of Hotbath Srl.
Without express authorization, the copying, distribution and utilization of this document as well as the communication to others is prohibited